MAXIMUM ALLOWED NOTCHING & DRILLING

Sec. 2517 (g) 8. & 9.

2"x4" STUD

CUTTING & NOTCHING

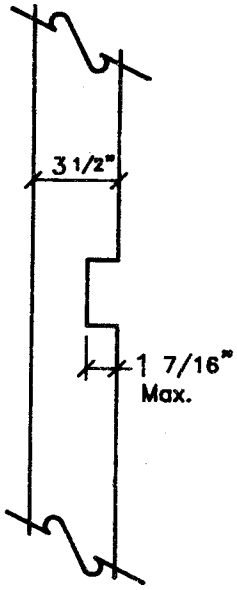

40% ALLOWED
NONBEARING

BORED HOLES

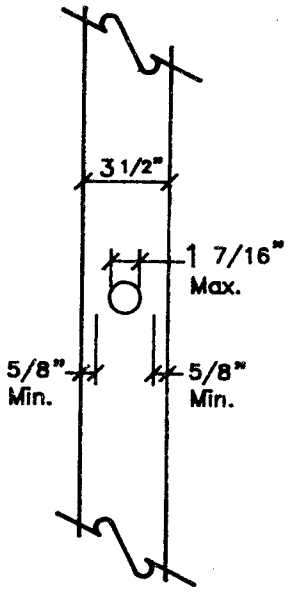

40% ALLOWED
NONBEARING

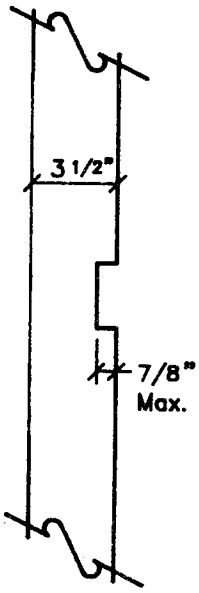

25% ALLOWED
EXTERIOR AND
BEARING WALLS

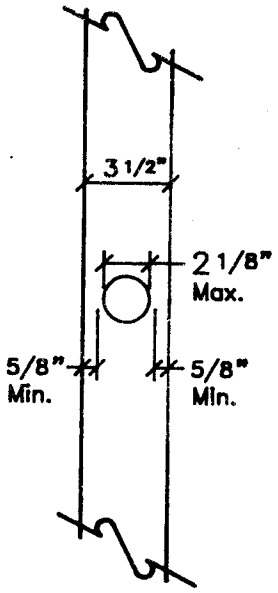

EXCEPTION
60% ALLOWED
NONBEARING WALLS
IF STUDS DOUBLED
NOT MORE THAN TWO
SUCCESSIVE DOUBLED
STUDS.

2"X6" STUD

CUTTING & NOTCHING

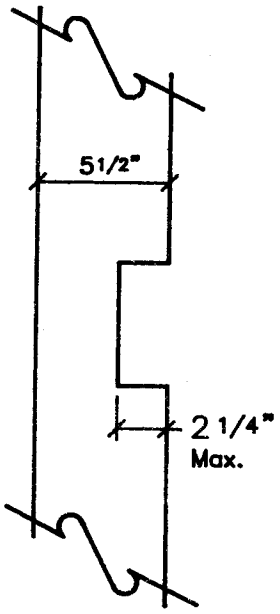

40% ALLOWED
NONBEARING

BORED HOLES

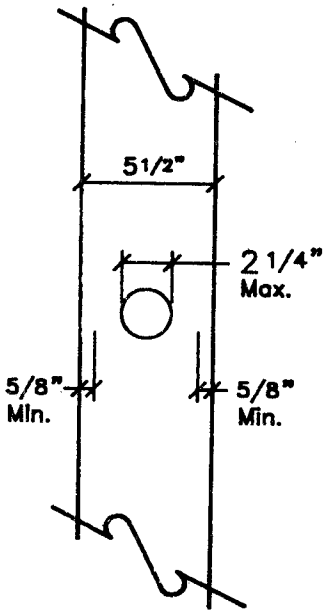

40% ALLOWED
NONBEARING

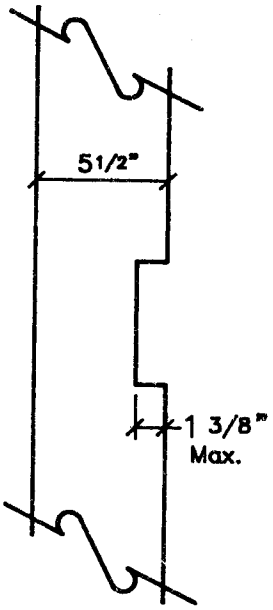

25% ALLOWED
EXTERIOR AND
BEARING WALLS

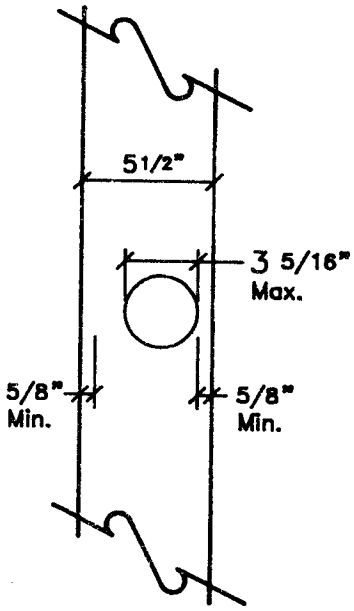

EXCEPTION
60% ALLOWED
NONBEARING WALLS
IF STUDS DOUBLED
NOT MORE THAN TWO
SUCCESSIVE DOUBLED
STUDS.