REVISIONS			
DESCRIPTIONS	BY	DATE	APPROVED

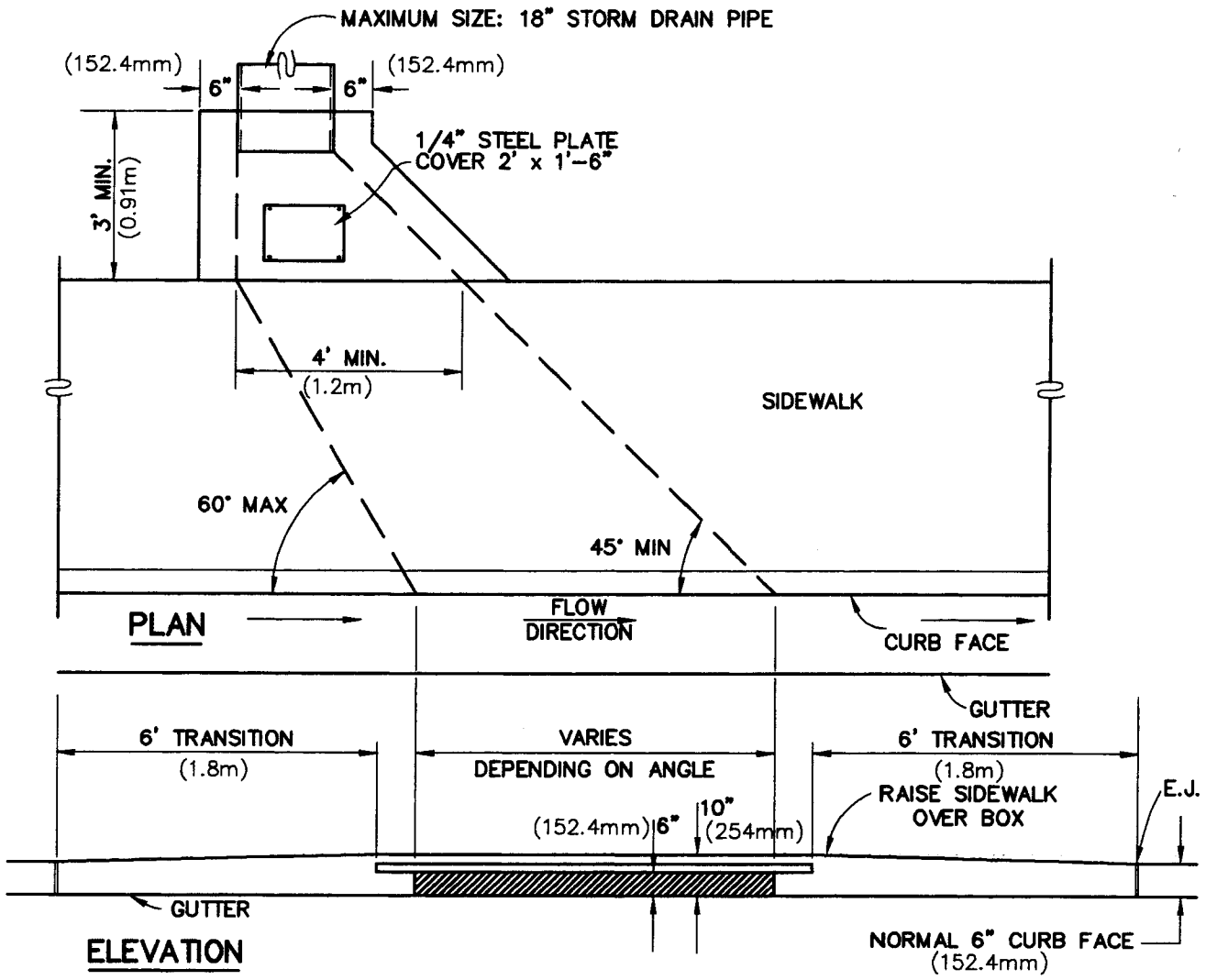

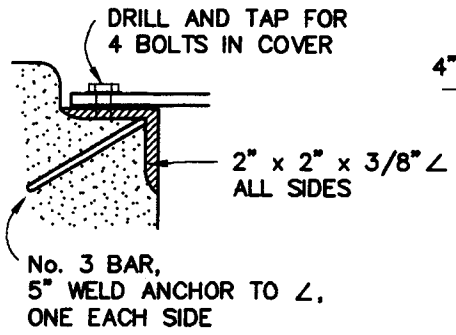

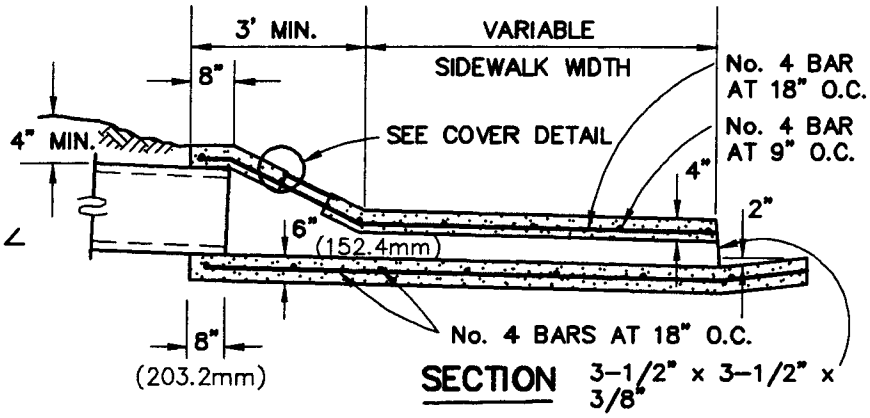

DRAWN BY: C.A.C.	CITY OF PASO ROBLES ENGINEERING DIVISION	DRAWING NO.
DESIGNED BY:	SIDEWALK UNDERDRAIN TYPE B	E-10
DATE: 4/18/94		
FILE NAME: PR-E-10.DWG		