REVISIONS			
DESCRIPTIONS	BY	DATE	APPROVED

NOTE:
ALL SERVICE CONNECTIONS REQUIRING BACKFLOW PROTECTION SHALL BE RP DEVICES.

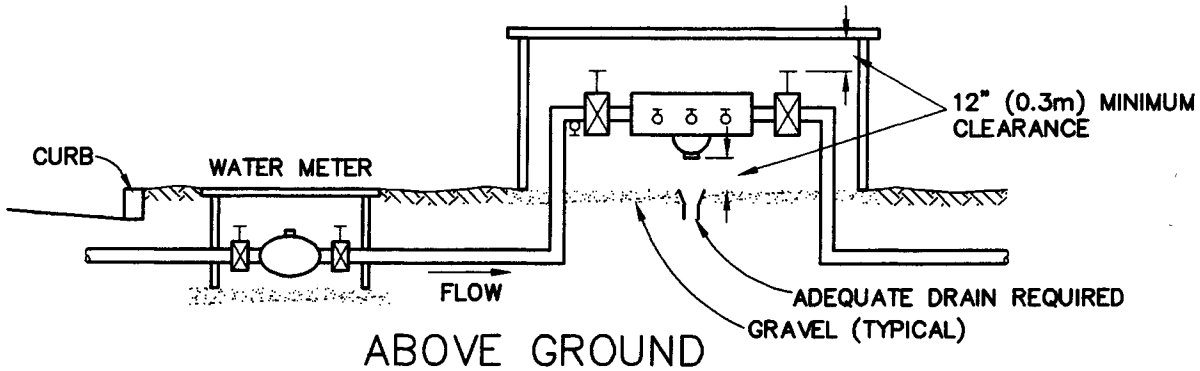

ABOVE GROUND

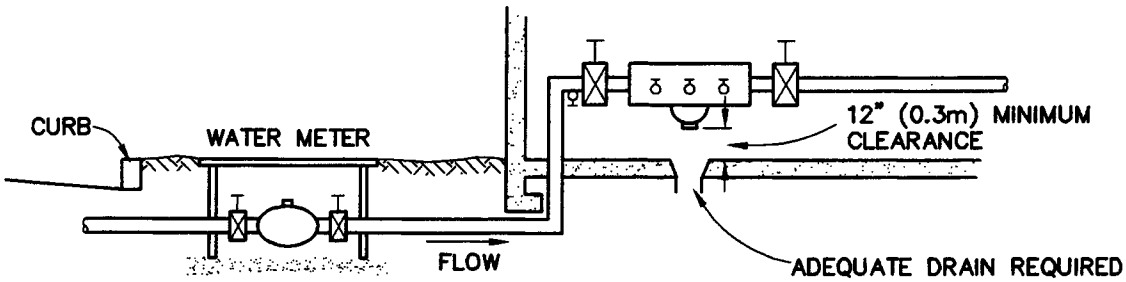

IN BUILDING

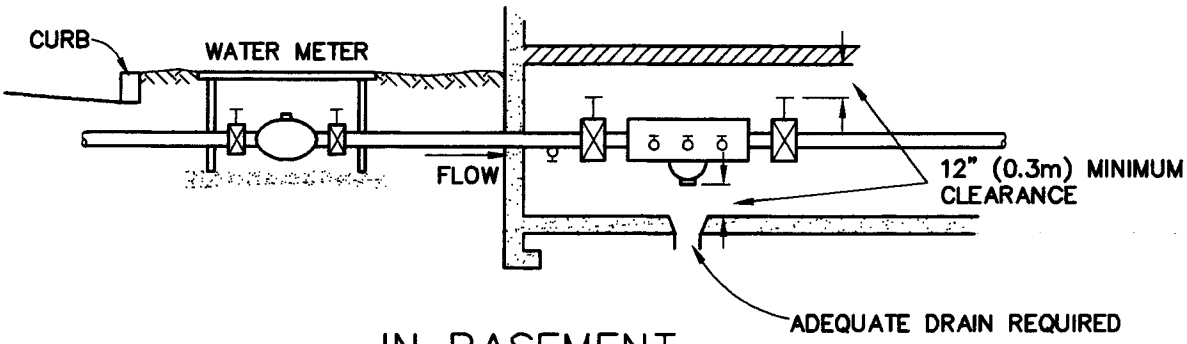

IN BASEMENT

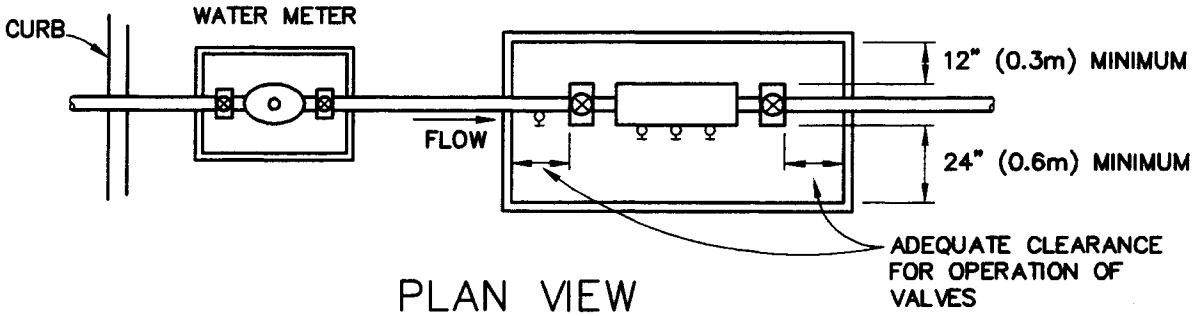

PLAN VIEW

DRAWN BY: C.A.C.	CITY OF PASO ROBLES ENGINEERING DIVISION	DRAWING NO.
DESIGNED BY:		
DATE: 4/18/94	RP DEVICE INSTALLATION	G-17
FILE NAME: PR-G-17.DWG		