REVISIONS			
DESCRIPTIONS	BY	DATE	APPROVED

SPECIAL CONSTRUCTION REQUIREMENTS

(TO BE USED ONLY WHERE REQUIRED SEPARATION CANNOT BE INSTALLED)

CASE 1 – NEW SEWER BEING INSTALLED

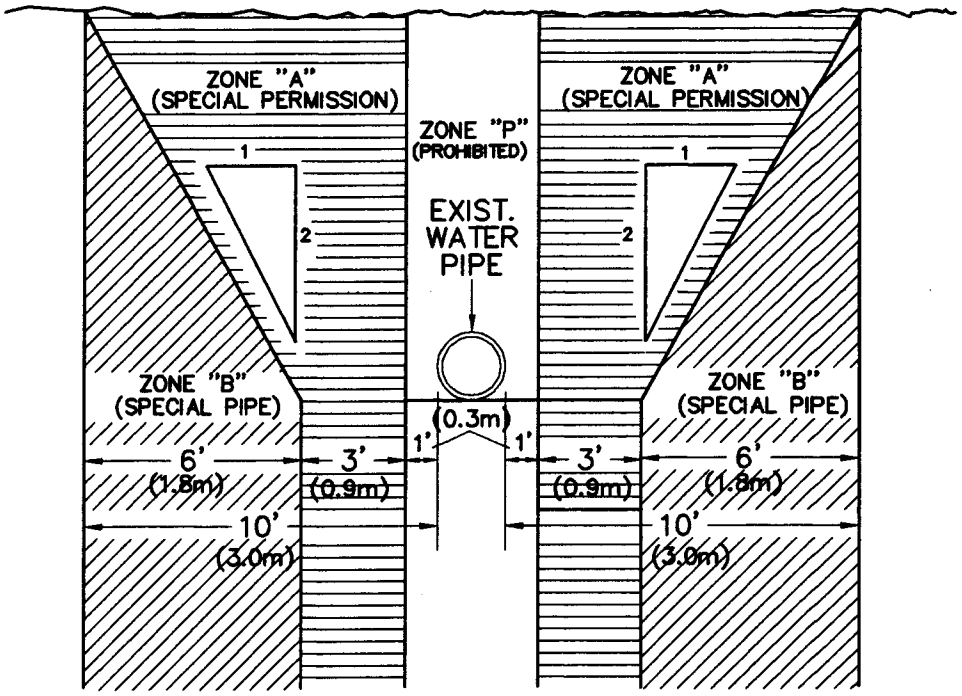

PARALLEL CONSTRUCTION

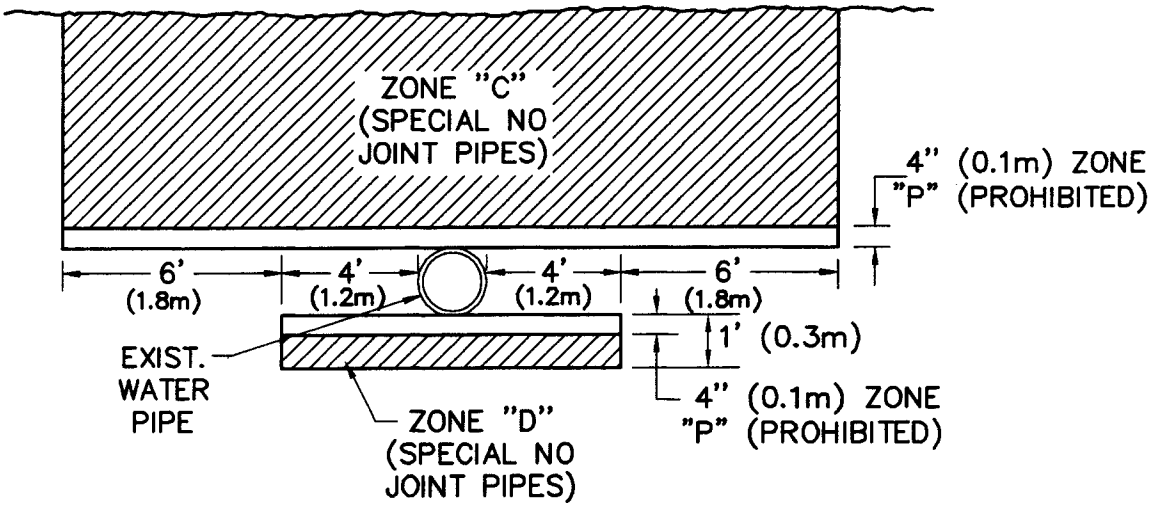

PERPENDICULAR CONSTRUCTION

DRAWN BY: C.A.C.	CITY OF PASO ROBLES ENGINEERING DIVISION	DRAWING NO.
DESIGNED BY:	CALIFORNIA HEALTH DEPARTMENT REQUIREMENTS	G–19
DATE: 4/18/94		
FILE NAME: PR–G–19.DWG		