REVISIONS			
DESCRIPTIONS	BY	DATE	APPROVED

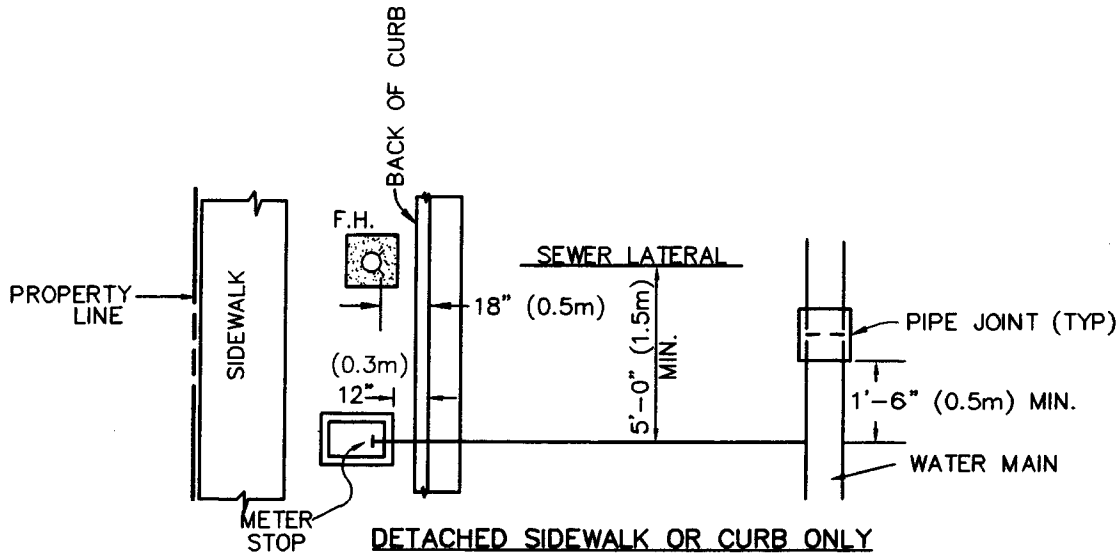

DETACHED SIDEWALK OR CURB ONLY
OR
10' (3.0m) WIDE SIDEWALK

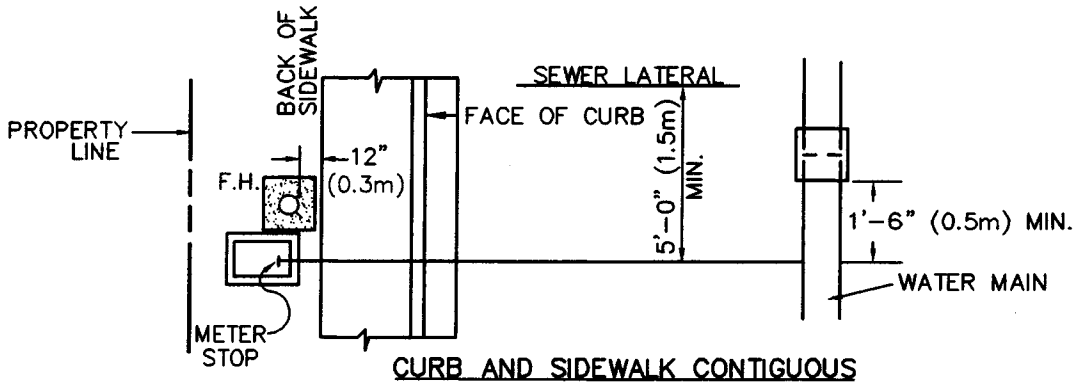

CURB AND SIDEWALK CONTIGUOUS

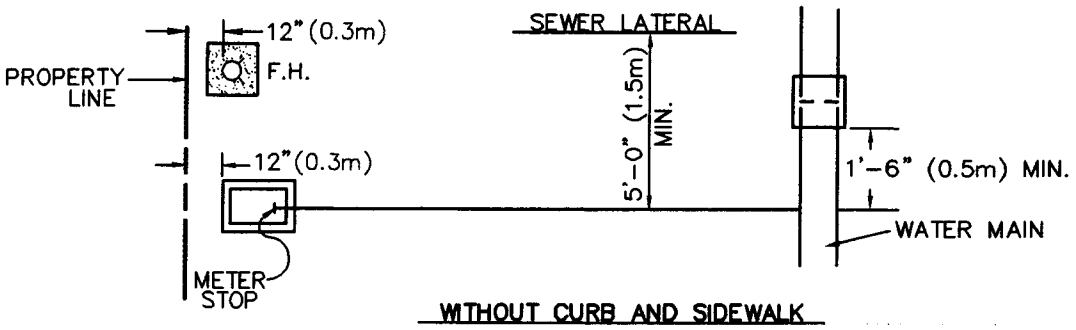

WITHOUT CURB AND SIDEWALK

NOTE: ALL BOXES ARE STANDARD METER BOXES.

DRAWN BY: C.A.C.	CITY OF PASO ROBLES ENGINEERING DIVISION	DRAWING NO.
DESIGNED BY:	WATER SERVICE/HYDRANT LOCATIONS	G-2
DATE: 4/18/94		
FILE NAME: PR-G-2.DWG		